kreon dolma 40

Date: _____ Customer: _____

Project: _____

Type: _____ Qty: _____

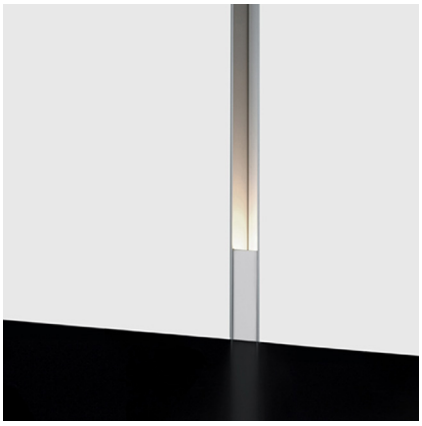

KUD40- UPD- _____- LED - ___- 90 - ____- ____- ____ - INT- _____

kreon dolma 40 - indoor	light direction	recessed profile length	light source	CCT	CRI	extrusion channel	luminaire front faceplate color	dimming	driver	number of modules per run
KUD40 **dolma 40 - indoor (visible 50mm)**	**UPD** Up and down	specify the recessed profile length in inches. Dolma 40 is made-to-measure	**LED**	**27** 2700K **30** 3000k	**90** CRI90	**WHC** White **BLKC** Black **ALC** Natural aluminum clear anodised **RALC*** Custom RAL color	**WHF** White **BLKF** Black **RAL*** Custom RAL color	**SW** ON/OFF **D2** 0-10V, 120-277V (10%) **D3-2W** Lutron Hi-Lume dim to 1% (2 wire forward phase, 120V[1] **D4** EldoLED LED dim to dark (0.1%) **DD** DALI,	**INT** Integral (standard)[2]	Specify the # of modules being used per run. See page 3 for details. Module is usually both ways - up or down.

Ordering Example: **KUD40-UPD-60-LED-27-90-WHT-WHC-D2-2**

***Consult factory for available RAL finishes**

[1] Requires (2) LED modules - Up and Down. [2] Consult factory for remote driver

kreon inc.
USA & Canada
20 Murray Hill Parkway, Suite 180
East Rutherford, NJ 07073
(201) 298-4448
quotes@kreon.com
www.kreon.com

kreon dolma 40

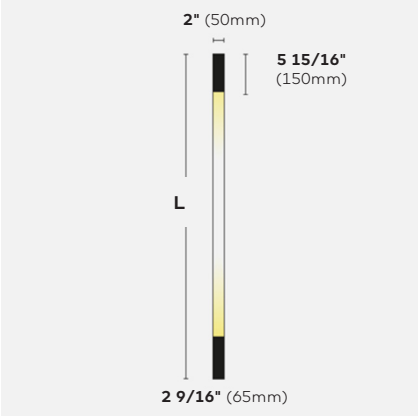

Description	kreon dolma 40 has a visible width of 2" (50mm). The luminaire is a recessed aluminum profile. It creates a sensuous luminous recess in vertical surfaces and provides ambient and placement lighting. This is achieved by the discrete concealment of LED sources behind flat panels that drift light along the linear profile reflector, tailor made to suit the application. The profile is made from natural anodized aluminum and available in various finished including RAL. Different lamp configurations can be applied.
Mounting	recessed aluminum profile luminaires for walls. Drywall/sheetrock or other building materials (recess board material: max ½", 12.5mm)" Dolma 40 is made to measure to suit your individual application.
Finish	channel finish available in white, black and natural aluminum clear anodised or RAL color (consult factory). Luminaire cover available in white, black or RAL (consult factory).
Optical system / LED's	3.2W; gear included with one CREE LED (this will vary slightly with the driver.
Color temp/ CRI	2700K or 3000K. CRI 90+ .
Controls / Dimming	0-10v dimming, DALI, Lutron Hi-Lume dim to 1%, EldoLED dim to dark or On/off switching
ETL / UL	ETL listed Indoor (dry locations). IP40 Rated. Provides credits for LEED certifications

ADA COMPLIANT

kreon Inc.
USA & Canada

20 Murray Hill Parkway, Suite 180
East Rutherford, NJ 07073

(201) 298-4448
quotes@kreon.com

www.kreon.com

kreon dolma 40

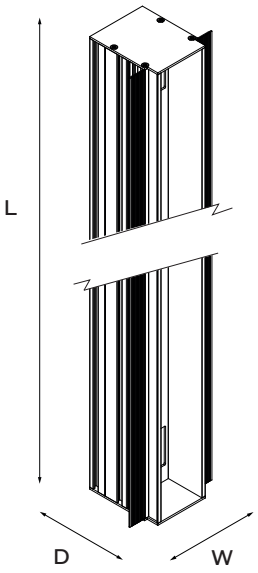

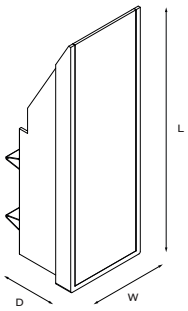

Dolma 40 recessed profile dimensions

L. Length (varies to your specification)
Max length 12'-0" (3657mm)

W. 3 15/16" (100mm)

D. 3 1/8" (80mm)

Dolma 40 up/down module dimensions

L. 6" (153mm)

W. 2" (50mm)

D. 1 9/16" (40mm)

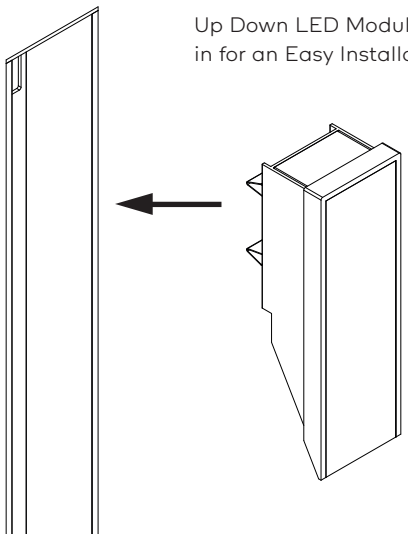

Up Down LED Module Snaps
in for an Easy Installation

drywall mounting

Suitable for 1/2" sheetrock only

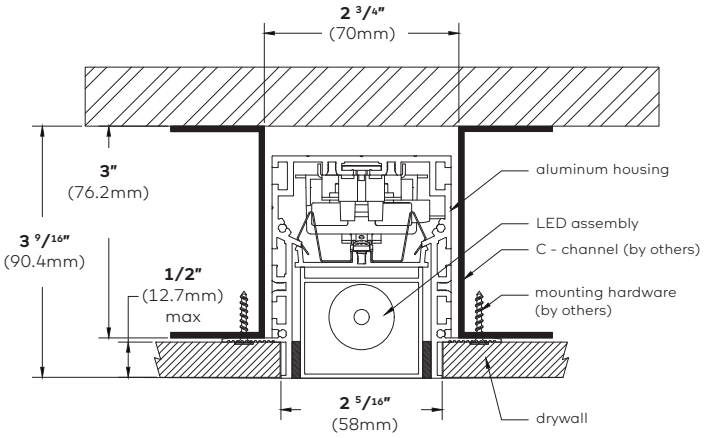

kreon Inc.
USA & Canada

20 Murray Hill Parkway, Suite 180
East Rutherford, NJ 07073

(201) 298-4448
quotes@kreon.com

www.kreon.com

D40_V1.24_10/19

kreon dolma 40

Photometry

dolma 40

natural profile/black cover

Report Number: 91534203927SP290000
Light Engine: 111 lumens
CCT: 2700K
CRI: 90+
Power: 3W
Efficacy 37 lm/W

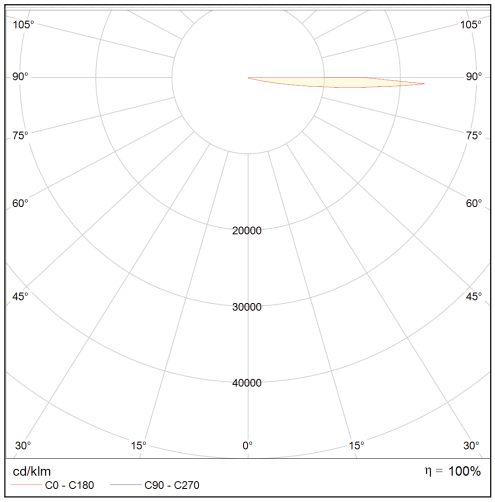

kreon Inc.
USA & Canada

20 Murray Hill Parkway, Suite 180
East Rutherford, NJ 07073

(201) 298-4448
quotes@kreon.com

www.kreon.com