kreon

technics	Name	Reference	Voltage
	Holon 80 directional surface mounted	KR96222x-xxxx-xx-xx	230V

Please make sure that main voltage is disconnected before proceeding!

1 dimensions

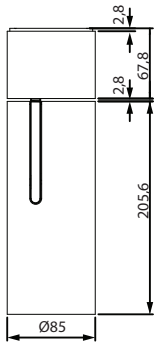

2 installation

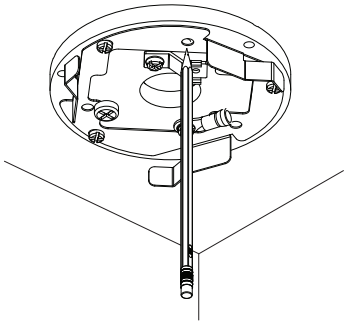

the installation part can be used to mark the fixation points on the ceiling

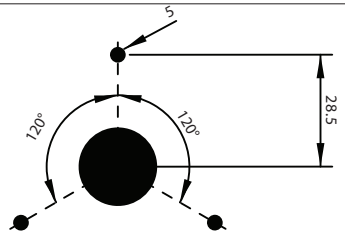

drill three holes (D 5mm) and one large hole in the middle for cable throughput (max. 20mm)

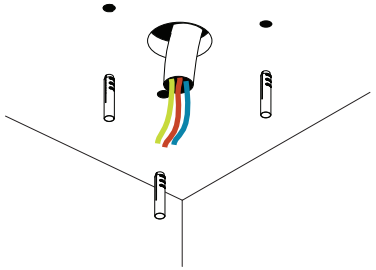

insert the plugs in the holes
pull the connection cables through

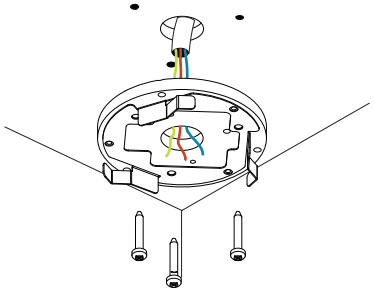

pull the connection cables through the hole in the middle of the installation part and fix it with 3 screws

installation

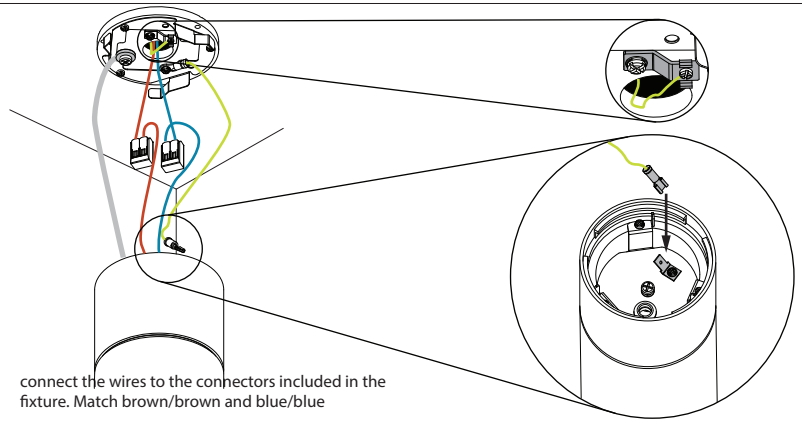

connect the wires to the connectors included in the fixture. Match brown/brown and blue/blue

In case of 1-10V option, also match the dimming cables red and black. Mind the polarity! Red = +, Black = -

in case of dali option, also match the dimming wires. dali has no polarity!

connect the earthing from the mains to the indicated bridge (fixate it underneath the screw)

connect the provided earthing connector to the earthing plate indicated

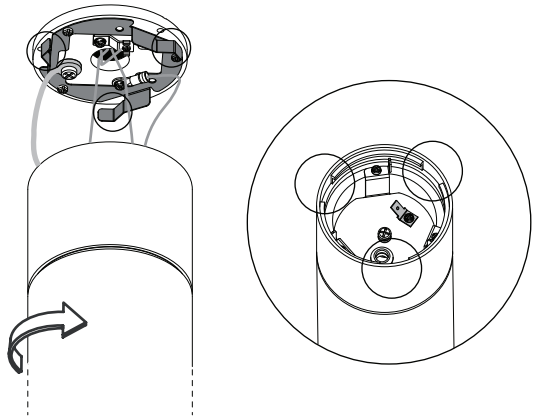

match the cut-outs in the toppart with the springs on the installion part and fix the completel fixture with a bayonet movement (counterclockwise)

kreon

installation

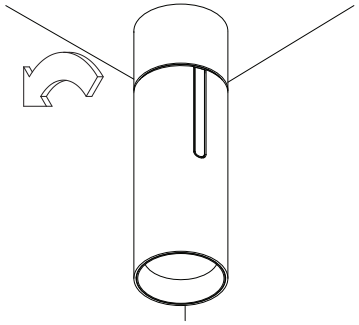

once the holon is completely installed
it can be inclined in any angle up to 90° by pullin the tube

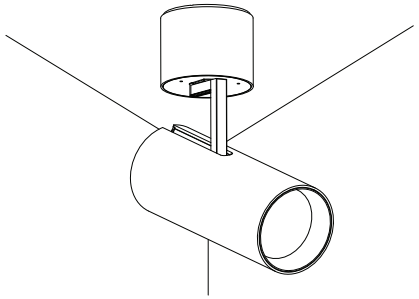

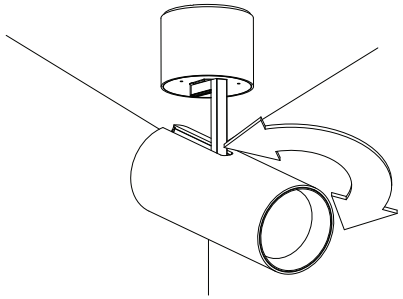

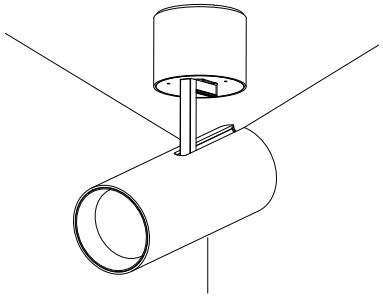

it can also be rotated for 330°

3 accessories

in case of accessories

KR726473

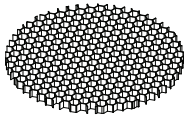

KR726100

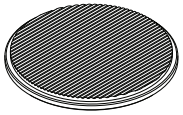

KR726200

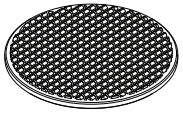

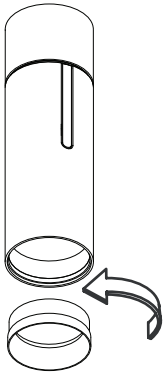

unscrew the louvre in order
to take it out of the fixture

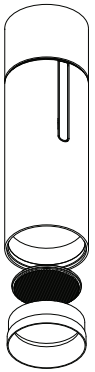

place the accessory in
the louvre

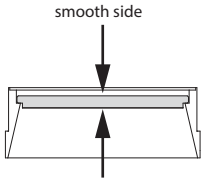

in case of diffusing/sculpture lens:
place the structured side downwards

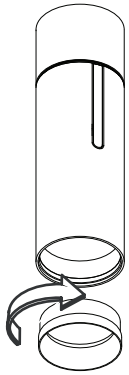

screw the louvre + the accessory
back in

4 pictures