kreon cana

kreon cana is a minimal architectural lighting channel that can be equipped with a wide range of LED luminaires. When recessed, kreon cana in white gives depth to ceiling surfaces, while kreon cana in black provides a visible separation.
For surface or pendant mounted, kreon cana provides an architectural beam for lighting integration.

kreon cana is offered in three widths and can accommodate kreon holon circular or kreon prologe square. A wide choice of luminaires can be mixed and arranged to suit the spatial demands and present illumination where it is required.
Endless lighting solutions can be configured, ranging from semi-recessed downlights, directional spots, linear lighting to more decorative pendant luminaires.

holon 40 directional in-cana

ligna 40 in-cana

prologe 80 single in-cana

holon 120 twin in-cana

Project Liv In
Location Visé, Belgium

Architect Luc Spits
Photographer Kenny Solas

cana 40 profile - surface mounted

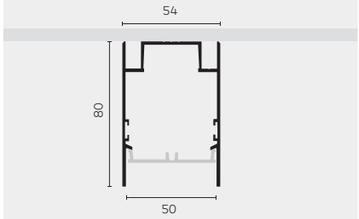

cana 40 profile - recessed mounted

cana 40 profile - pendant mounted

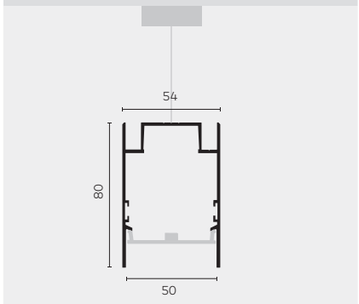

cana 40 profile - corner cut

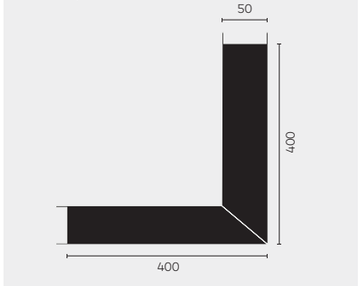

	Colour	KR-code	Optional accessories
cana 40 profile ❶	○	KR**755201**	■
	●	KR**755202**	■

■ **Optional accessories**

Plasterkit for recessed mounting ❷		KR**705000**	Trimless plasterkit profile ◔ **LxW** Lx75 **H** 115
Suspension kit for pendant mounting ❸		KR**705200**	Suspension kit
		KR**705202**	Additional suspension
Corner cut ❹	○	KR**705501**	cana 40 corner cut 90°, white
	●	KR**705502**	cana 40 corner cut 90°, black
		KR**705560**	Trimless plasterkit corner cut 90°

REMARKS
❶ Maximum length of a single run profile: 5900mm. Shipping length depends on transport possibilities.
❷ Profile should be finished with polyester gypsum. Max. thickness boardmaterial: 26mm.
❸ Pendant height is max. 2,5m. Suspension kit is suitable for 2m of pendant profile. Every extra 2 meter requires an additional steel suspension.
❹ No luminaires can be placed in the corner cut.

The profile is supplied pre-assembled. The coverplates on the inside of the profile are always black.
IP40

Surface mounted | Recessed mounted | Pendant mounted

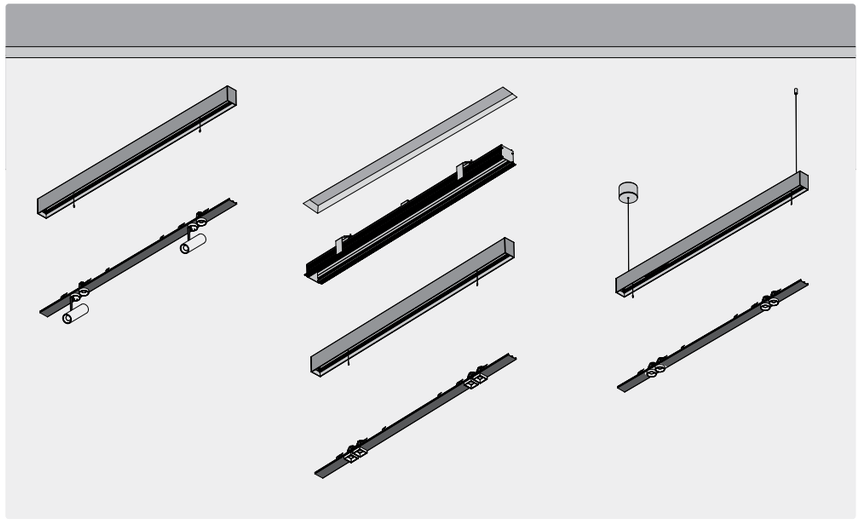

kreon cana 40
holon

holon 40 single in-cana

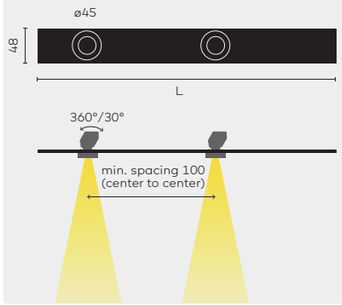

holon 40 twin in-cana

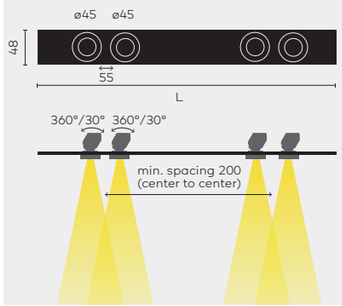

holon 40 directional in-cana

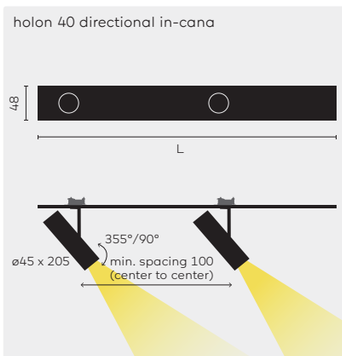

	Colour ❶	KR-code	Light sources	**8027** 2700K, CRI80+	**8030** 3000K, CRI80+	**9027** 2700K, CRI90+	**9030** 3000K, CRI90+	**SP** Spot (10°)	**FL** Flood (24°)	**WFL** Wide flood (46°)	**SP** Spot (20°)	**FL** Flood (30°)	**WFL** Wide flood (40°)	**DL** Darklight (35°)	**WDL** Wide darklight (55°)	**EX** Driver excluded ❸	**SW** Switchable ON/OFF ❹	**PD** Phase dimming ❹	**VD** 1-10V dimming ❹	**DD** DALI dimming ❹	Optional accessories
holon 40 single in-cana **Min. module spacing**: 100 ❷	○	KR**934001**	①	●	●	●	●	●	●	●						●	●	●	●	●	■
	●	KR**934002**	①	●	●	●	●	●	●	●						●	●	●	●	●	■
holon 40 twin in-cana **Min. module spacing**: 200 ❷	○	KR**934501**	②	●	●	●	●	●	●	●						●	●	●	●	●	■
	●	KR**934502**	②	●	●	●	●	●	●	●						●	●	●	●	●	■
holon 40 directional in-cana **Min. module spacing**: 100 ❷	○	KR**934301**	③	●	●	●	●				●	●	●	●	●	●	●	●	●	●	■
	●	KR**934302**	③	●	●	●	●				●	●	●	●	●	●	●	●	●	●	■

■ **Optional accessories**

High output ❺	KR**762600**	1050mA drive current on modules
Lenses holon 40 directional -SP, -FL, -WFL in-cana	KR**762000**	Anti-glare louvre
	KR**762200**	Diffusing lens
	KR**762100**	Sculpture lens
Driver (For fixtures with drive excluded)	KR**772034**	LED driver, 700mA, ON/OFF, 20W
	KR**772050**	LED driver, 700mA, ON/OFF, 50W
	KR**772232**	LED driver, 700mA, 1-10V, 20W
	KR**772532**	LED driver, 700mA, 1-10V, 60W
	KR**772134**	LED driver, 700mA, DALI, 20W
	KR**772333**	LED driver, 700mA, DALI, 60W

	CRI	CCT	Wattage	Drive current	Fixture lumen
① LED	CRI80+	2700K/3000K	2W	700mA	152lm
			3,2W	1050mA	219lm
	CRI90+	2700K/3000K	2W	700mA	121lm
			3,2W	1050mA	143lm
② LED	CRI80+	2700K/3000K	2 x 2W	700mA	304lm
			2 x 3,2W	1050mA	438lm
	CRI90+	2700K/3000K	2 x 2W	700mA	243lm
			2 x 3,2W	1050mA	286lm
③ LED	CRI80+	2700K/3000K	8,4W	700mA	721lm
	CRI90+	2700K/3000K	8,4W	700mA	558lm

REMARKS

❶ The coverplates on the inside of the profile are always black.
❷ The minimum module spacing is the minimum center distance to the next in-cana 40 module.
❸ Use constant current LED driver on remote. One circuit may not exceed a forward voltage of 48VDC to keep the profile class 3. Max. 2 circuits.
❹ LED drivers set at 700mA are integrated in the profile. Class 1 profile, input voltage is 230V. Max. 1 circuit.
❺ Set the drive current of modules to 1050mA. Only possible with -SW, -VD or -DD modules.

The luminaire modules are supplied pre-assembled in the profile. Combinations can be specified on order form. Consult your kreon sales representative or one of the kreon offices.
IP40

kreon cana 40

prologe & ligna

prologe 40 single in-cana

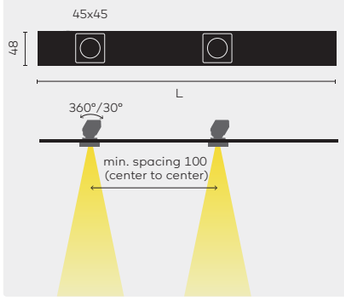

prologe 40 twin in-cana

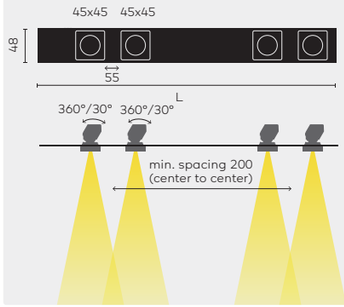

prologe 40 double in-cana

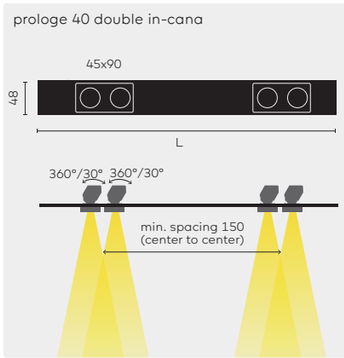

ligna 40 in-cana

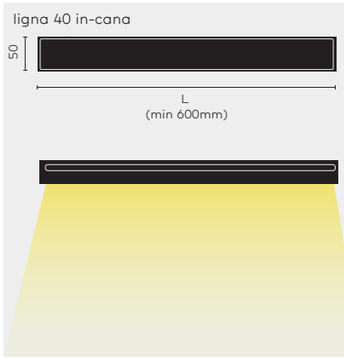

		Colour ❶	KR-code	Light sources	**8027** 2700K, CRI80+	**8030** 3000K, CRI80+	**8527** 2700K, CRI85+	**8530** 3000K, CRI85+	**9027** 2700K, CRI90+	**9030** 3000K, CRI90+	**SP** Spot (10°)	**FL** Flood (24°)	**WFL** Wide flood (46°)	**EX** Driver excluded ❸	**SW** Switchable ON/OFF ❹	**PD** Phase dimming ❹	**VD** 1-10V dimming ❹	**DD** DALI dimming ❹	Optional accessories
	prologe 40 single in-cana **Min. module spacing**: 100 ❷	○	KR**934051**	①	●	●			●	●	●	●	●	●	●	●	●	●	■
		●	KR**934052**	①	●	●			●	●	●	●	●	●	●	●	●	●	■
	prologe 40 twin in-cana **Min. module spacing**: 200 ❷	○	KR**934551**	②	●	●			●	●	●	●	●	●	●	●	●	●	■
		●	KR**934552**	②	●	●			●	●	●	●	●	●	●	●	●	●	■
	prologe 40 double in-cana **Min. module spacing**: 150 ❷	○	KR**934751**	②	●	●			●	●	●	●	●	●	●	●	●	●	■
		●	KR**934752**	②	●	●			●	●	●	●	●	●	●	●	●	●	■
	ligna 40 in-cana High efficiency		KR**934900**	③			●	●						●	●		●	●	■
	ligna 40 in-cana High output		KR**934902**	④			●	●						●	●		●	●	■

■ **Optional accessories**

High output ❺	KR**762600**	1050mA drive current on modules
Driver (for fixtures with driver excluded)	KR**772034**	LED driver, 700mA, ON/OFF, 20W
	KR**772050**	LED driver, 700mA, ON/OFF, 50W
	KR**772232**	LED driver, 700mA, 1-10V, 20W
	KR**772532**	LED driver, 700mA, 1-10V, 60W
	KR**772134**	LED driver, 700mA, DALI, 20W
	KR**772133**	LED driver, 700mA, DALI, 30W
	KR**772333**	LED driver, 700mA, DALI, 60W
Power Supply (for ligna driver exclusive)	KR**490373**	LED power supply 24VDC, 30W, ON-OFF
	KR**490374**	LED power supply 24VDC, 60W, ON-OFF
	KR**490375**	LED power supply 24VDC, 100W, 0-10V
	KR**772160**	LED power supply 24VDC, 150W, ON-OFF
Controller (for ligna driver exclusive)	KR**774106**	1-10V controller for ligna 40 in-cana, max. 120W, 1 control channel, 10-24Vdc input
	KR**774006**	DALI/DMX controller for ligna 40 in-cana, max. 720W, 4 control channels, 12-48Vdc input

		CRI	CCT	Wattage	Drive current	Fixture lumen
①	LED	CRI80+	2700K/3000K	2W	700mA	152lm
				3,2W	1050mA	219lm
		CRI90+	2700K/3000K	2W	700mA	121lm
				3,2W	1050mA	143lm
②	LED	CRI80+	2700K/3000K	2 x 2W	700mA	304lm
				2 x 3,2W	1050mA	438lm
		CRI90+	2700K/3000K	2 x 2W	700mA	243lm
				2 x 3,2W	1050mA	286lm
③	LED	CRI85+	2700K / 3000K	11,6W/m	24Vdc	921lm/m
④	LED	CRI85+	2700K / 3000K	19,2W/m	24Vdc	1417lm/m

REMARKS

❶ The coverplates on the inside of the profile are always black.
❷ The minimum module spacing is the minimum center distance to the next in-cana 40 module.
❸ Use constant current LED driver on remote. One circuit may not exceed a forward voltage of 48VDC to keep the profile class 3. Max. 2 circuits.
❹ LED drivers set at 700mA are integrated in the profile. Class 1 profile, input voltage is 230V. Max. 1 circuit.
❺ set the drive current of modules to 1050mA. Only possible with -SW, -VD or -DD modules.

The luminaire modules are supplied pre-assembled in the profile. Combinations can be specified on order form. Consult your kreon sales representative or one of the kreon offices.
IP40

pendant modules

holon 40 for pendant module in-cana

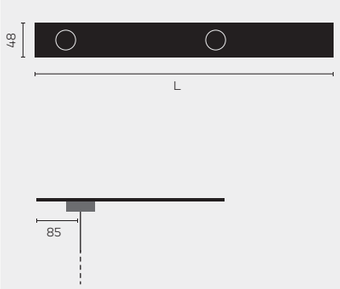

prologe 40 for pendant module in-cana

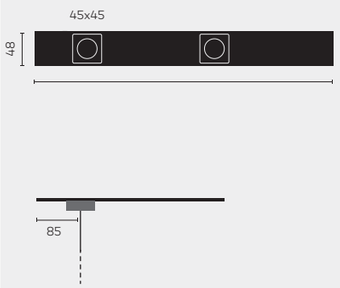

		Colour ❶	KR-code	EX ❷ Driver excluded	SW ❸ Switchable ON/OFF	PD ❸ Phase dimming	VD ❸ 1-10V dimming	DD ❸ DALI dimming	Required accessories	optional accessories
	holon 40 for pendant module in-cana (coming soon)	○	KR**934031**	●	●	●	●	●	■	■
		●	KR**934032**	●	●	●	●	●	■	■
	prologe 40 for pendant module in-cana (coming soon)	○	KR**934041**	●	●	●	●	●	■	■
		●	KR**934042**	●	●	●	●	●	■	■

■ **Required accessories**

Pendants		See page 88-93

■ **Optional accessories**

Driver (for fixtures with driver excluded)	KR**772034**	LED driver, 700mA, ON/OFF, 20W
	KR**772050**	LED driver, 700mA, ON/OFF, 50W
	KR**772232**	LED driver, 700mA, 1-10V, 20W
	KR**772532**	LED driver, 700mA, 1-10V, 60W
	KR**772134**	LED driver, 700mA, DALI, 20W
	KR**772133**	LED driver, 700mA, DALI, 30W
	KR**772333**	LED driver, 700mA, DALI, 60W

REMARKS
❶ The coverplates on the inside of the profile are always black.
❷ Use constant current LED driver on remote. One circuit may not exceed a forward voltage of 48VDC to keep the profile class 3. Max. 2 circuits.
❸ LED drivers set at 700mA are integrated in the profile. Class 1 profile, input voltage is 230V. Max. 1 circuit.

The pendant modules are supplied pre-assembled in the profile. Combinations can be specified on order form. Consult your kreon sales representative or one of the kreon offices.
IP40

holon 40 pendant

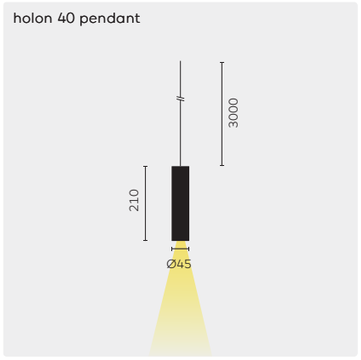

	Colour	KR-code	Light sources	**9027** 2700K, CRI90+	**9030** 3000K, CRI90+	**SP** Spot (20°)	**FL** Flood (35°)	**WFL** Wide flood (55°)	**DL** Dark light (35°) ❶	**WDL** Wide dark light (55°) ❶	**P1** Louvre painted white ❷	**P2** Louvre painted black ❷	**A5** Louvre red copper ❷
holon 40 pendant	○	KR**962001**	①	●	●	●	●	●	●	●	●	●	●
	●	KR**962002**	①	●	●	●	●	●	●	●	●	●	●

		CRI	CCT	Voltage	Wattage	Drive current	Fixture lumen
①	LED	CRI90+	2700K/3000K		8,4W	700mA	558lm
	darklight	CRI90+	2700K/3000K		8,4W	700mA	420lm

REMARKS
❶ Only available in combination with black or red copper louvre and CRI90+
❷ Finishing colour of the louvre in the holon 40 pendant cylinder

Length pendant cord: 3000mm
IP40

oran pendant craft

oran craft

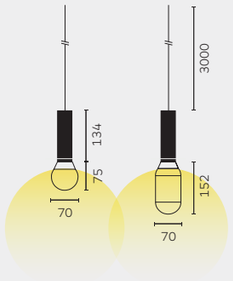

oran kap craft

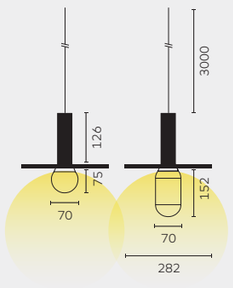

		Colour	KR-code	Light sources	9027 2700K, CRI90+	9030 3000K, CRI90+	S Glass sphere bulb	L Glass long ampoule	3 3 meter pendant	6 6 meter pendant	P1 White shade bottom	P2 Black shade bottom	A3 Grey shade bottom	A4 Bronze shade bottom
	oran pendant craft (temporarily unavailable)	○	KR**991121**	①	●	●	●	●	●	●				
		●	KR**991122**	①	●	●	●	●	●	●				
	oran pendant kap craft (temporarily unavailable)	○	KR**991141**	①	●	●	●	●	●	●	●			
		●	KR**991142**	①	●	●	●	●	●	●		●	●	●

			CRI	CCT	Wattage	Drive current	Fixture lumen
①	LED	glass	CRI90+	2700K/3000K	6,7W	700mA	307lm

REMARKS

The stated dimensions of the glass and albast are only to be used as a reference. Actual dimensions may vary. Each unit is unique due to the artisanal production technique.

◈ IP40

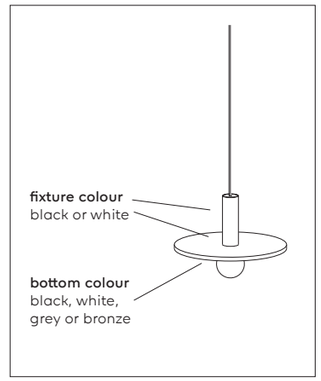

oran pendant stone

oran stone

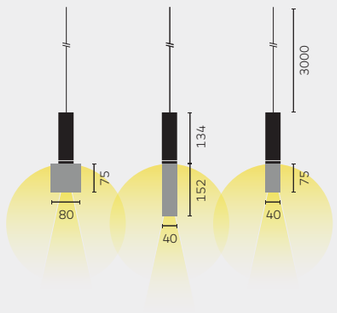

oran kap stone

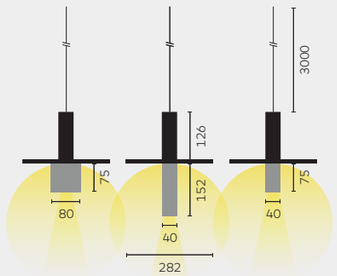

		Colour	KR-code	Light sources	**9027** 2700K, CRI90+	**9030** 3000K, CRI90+	**P1** White shade bottom	**P2** Black shade bottom	**A3** Grey shade bottom	**A4** Bronze shade bottom
	oran pendant stone, large cube ❶	○	KR**991211**	①	●	●				
		●	KR**991212**	①	●	●				
	oran pendant stone, large cylinder ❶	○	KR**991111**	①	●	●				
		●	KR**991112**	①	●	●				
	oran pendant stone, small cylinder ❶	○	KR**991311**	①	●	●				
		●	KR**991312**	①	●	●				
	oran pendant stone, long cylinder ❶	○	KR**991411**	①	●	●				
		●	KR**991412**	①	●	●				
	oran pendant kap stone, large cube ❶	○	KR**991231**	①	●	●	●			
		●	KR**991232**	①	●	●		●	●	●
	oran pendant kap stone, large cylinder ❶	○	KR**991131**	①	●	●	●			
		●	KR**991132**	①	●	●		●	●	●
	oran pendant kap stone, small cylinder ❶	○	KR**991331**	①	●	●	●			
		●	KR**991332**	①	●	●		●	●	●
	oran pendant kap stone, long cylinder ❶	○	KR**991431**	①	●	●	●			
		●	KR**991432**	①	●	●		●	●	●

	CRI	CCT	Wattage	Drive current	Fixture lumen
① LED	CRI90+	2700K/3000K	6,7W	700mA	❷ 315lm

REMARKS
❶ Protect the alabaster block against direct sunlight and temperatures above 50°C.
❷ Lumen output may vary due to the use of natural products.

Pendant length: 3m

Gear excluded
◈ IP40

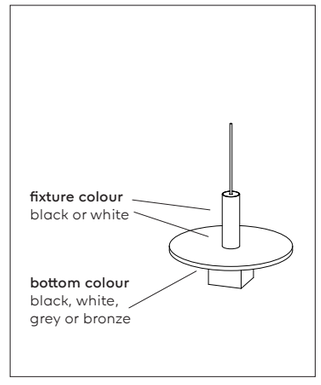

cana 80 profile - recessed mounted

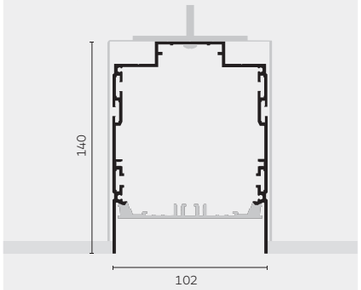

cana 80 profile - corner cut

	Colour	KR-code	Required accessories	Optional accessories
cana 80 profile **Input voltage**: 230V, **nr. of circuits**: 3	○	KR**775201**	■	■
	●	KR**775202**	■	■

■ Required accessories

Plasterkit ❷	KR**705010**	Trimless plasterkit profile ◔ **LxW** Lx125 H 185

■ Optional accessories

Corner cut ❸	KR**705511**	cana 80 corner cut 90°, white
	KR**705512**	cana 80 corner cut 90°, black
	KR**705610**	Trimless plasterkit corner cut 90°

REMARKS
❶ Maximum length of a single run profile: 5900mm. Shipping length depends on transport possibilities.
❷ Profile should be finished with polyester gypsum. Max. thickness boardmaterial: 26mm.
❸ No luminaire can be placed in the corner cut.

The profile is supplied pre-assembled. The coverplates on the inside of the profile are always black.
IP40

cana 80

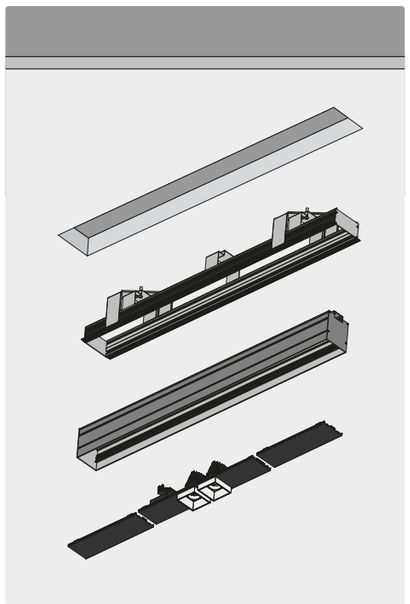

kreon cana 80
holon

holon 80 single in-cana mid/end

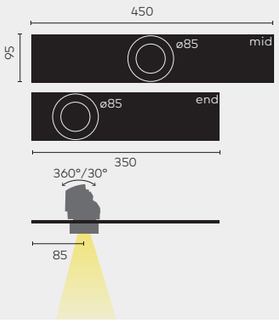

holon 80 twin in-cana mid/end

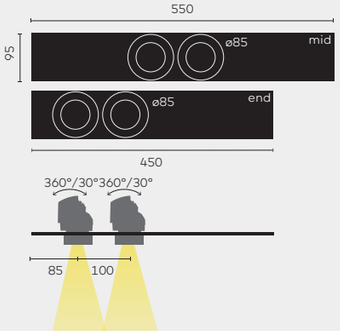

		Colour ❶	KR-code	Light sources	8327 2700K, CRI83	8330 3000K, CRI83	8340 4000K, CRI83	9027 2700K, CRI90	9030 3000K, CRI90	9040 4000K, CRI90	9827 2700K, CRI98	9830 3000K, CRI98	9840 4000K, CRI98	SP Spot (17°)	SP Spot (30°)	FL Flood (27°)	FL Flood (50°)	WFL Wide flood (38°)	SW Switchable ON/OFF	VD 1-10V dimming	DD DALI dimming	Optional accessories
	holon 80 single in-cana mid	○	KR**934011**	①	●	●	●	●	●	●	●	●	●	●		●		●	●	●	●	■
		●	KR**934012**	①	●	●	●	●	●	●	●	●	●	●		●		●	●	●	●	■
	holon 80 HE single in-cana mid High efficiency	○	KR**934081**	②				●	●	●					●		●		●	●	●	■
		●	KR**934082**	②				●	●	●					●		●		●	●	●	■
	holon 80 single in-cana end	○	KR**934111**	①	●	●	●	●	●	●	●	●	●	●		●		●	●	●	●	■
		●	KR**934112**	①	●	●	●	●	●	●	●	●	●	●		●		●	●	●	●	■
	holon 80 HE single in-cana end High efficiency	○	KR**934181**	②				●	●	●					●		●		●	●	●	■
		●	KR**934182**	②				●	●	●					●		●		●	●	●	■
	holon 80 twin in-cana mid	○	KR**934511**	③	●	●	●	●	●	●	●	●	●	●		●		●	●	●	●	■
		●	KR**934512**	③	●	●	●	●	●	●	●	●	●	●		●		●	●	●	●	■
	holon 80 HE twin in-cana mid High efficiency	○	KR**934581**	④				●	●	●					●		●		●	●	●	■
		●	KR**934582**	④				●	●	●					●		●		●	●	●	■
	holon 80 twin in-cana end	○	KR**934611**	③	●	●	●	●	●	●	●	●	●	●		●		●	●	●	●	■
		●	KR**934612**	③	●	●	●	●	●	●	●	●	●	●		●		●	●	●	●	■
	holon 80 twin HE in-cana end High efficiency	○	KR**934681**	④				●	●	●					●		●		●	●	●	■
		●	KR**934682**	④				●	●	●					●		●		●	●	●	■

■ **Optional accessories**

Lenses holon 80 single & holon 80 twin in-cana ❷ (for twin, order twice)	KR**704100**	Sculpture lens ❸
	KR**704200**	Diffusing lens
	KR**704800**	Softening lens
	KR**772342**	Anti-glare louvre ❸

	CRI	CCT	Voltage	Wattage	Fixture lumen
① LED	CRI83/90	2700K/3000K/4000K	230V	10,9W	572lm
	CRI98	2700K/3000K/4000K	230V	10,9W	420lm
② LED (SP)	CRI90	2700K/3000K/4000K	230V	9,9W	736lm
(FL)	CRI90	2700K/3000K/4000K	230V	12W	1000lm
③ LED	CRI83/90	2700K/3000K/4000K	230V	2 x 10,9W	1144lm
	CRI98	2700K/3000K/4000K	230V	2 x 10,6W	840lm
④ LED (SP)	CRI90	2700K/3000K/4000K	230V	2 x 9,9W	1472lm
(FL)	CRI90	2700K/3000K/4000K	230V	2 x 12W	2000lm

REMARKS
❶ The coverplates on the inside of the profile are always black.
❷ Only one optional lens or louvre possible. Cannot be used in combination with HE modules.
❸ Use only in combination with spot optic.

Combinations can be specified on order form. Consult your kreon sales representative or one of the kreon offices.

IP40

kreon cana 80

holon directional

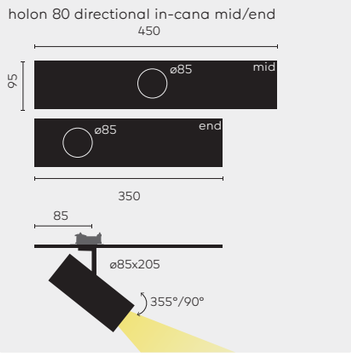

		Colour ❶	KR-code	Light sources	**8327** 2700K, CRI83	**8330** 3000K, CRI83	**8340** 4000K, CRI83	**9027** 2700K, CRI90	**9030** 3000K, CRI90	**9040** 4000K, CRI90	**9827** 2700K, CRI98	**9830** 3000K, CRI98	**9840** 4000K, CRI98	**SP** Spot (14°)	**FL** Flood (30°)	**WFL** Wide flood (38°)	**SW** Switchable ON/OFF	**VD** 1-10V dimming	**DD** DALI dimming	Optional accessories
	holon 80 directional in-cana mid	○	KR**934311**	③	●	●	●	●	●	●	●	●	●	●	●	●	●	●	●	■
		●	KR**934312**	③	●	●	●	●	●	●	●	●	●	●	●	●	●	●	●	■
	holon 80 directional in-cana end	○	KR**934411**	③	●	●	●	●	●	●	●	●	●	●	●	●	●	●	●	■
		●	KR**934412**	③	●	●	●	●	●	●	●	●	●	●	●	●	●	●	●	■

■ **Optional accessories**

Lenses holon 80 directional in-cana ❷	KR**726100**	Sculpture lens ❸
	KR**726200**	Diffusing lens
	KR**762002**	Anti-glare louvre ❸

			CRI	CCT	Voltage	Wattage	Fixture lumen
③	LED	**SP**	CRI83	2700K/3000K/4000K	230V	30,2W	1641lm
			CRI90	2700K/3000K/4000K	230V	30,2W	1641lm
			CRI98	2700K/3000K/4000K	230V	29,5W	1280lm
		FL & WFL	CRI83	2700K/3000K/4000K	230V	25,7W	2415lm
			CRI90	2700K/3000K/4000K	230V	25,7W	2415lm
			CRI98	2700K/3000K/4000K	230V	20W	1610lm

REMARKS
❶ The coverplates on the inside of the profile are always black.
❷ Only one optional lens or louvre possible.
❸ Use only in combination with spot optic.

Combinations can be specified on order form. Consult your kreon sales representative or one of the kreon offices.
Gear included.
IP40

kreon cana 80

prologe & ligna

prologe 80 single in-cana mid/end

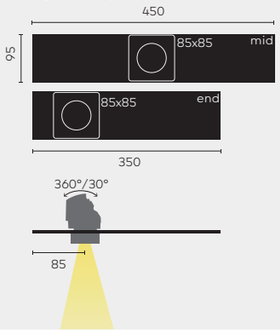

prologe 80 twin in-cana mid/end

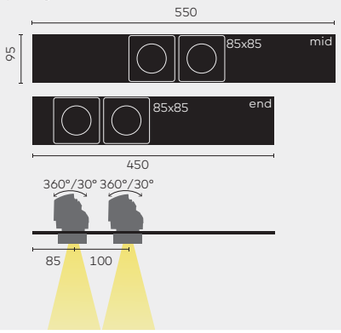

ligna 80 in-cana

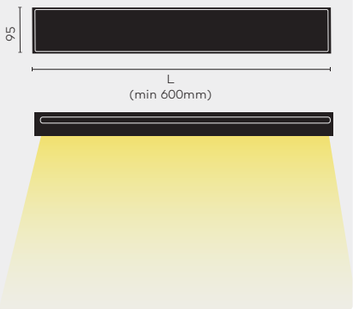

	Colour ❶	KR-code	Light sources	8327 2700K, CRI83	8330 3000K, CRI83	8340 4000K, CRI83	9027 2700K, CRI90+	9030 3000K, CRI90+	9040 4000K, CRI90+	9827 2700K, CRI98	9830 3000K, CRI98	9840 4000K, CRI98	SP Spot (17°)	SP Spot (30°)	FL Flood (27°)	FL Flood (50°)	WFL Wide flood (38°)	SW Switchable ON/OFF	VD 1-10V dimming	DD DALI dimming	Optional accessories
prologe 80 single in-cana mid	○	KR**934061**	①	●	●	●	●	●	●	●	●	●	●		●		●	●	●	●	■
	●	KR**934062**	①	●	●	●	●	●	●	●	●	●	●		●		●	●	●	●	■
prologe 80 HE single in-cana mid High efficiency	○	KR**934091**	②				●	●	●					●		●		●	●	●	■
	●	KR**934092**	②				●	●	●					●		●		●	●	●	■
prologe 80 single in-cana end	○	KR**934161**	①	●	●	●	●	●	●	●	●	●	●		●		●	●	●	●	■
	●	KR**934162**	①	●	●	●	●	●	●	●	●	●	●		●		●	●	●	●	■
prologe 80 HE single in-cana end High efficiency	○	KR**934191**	②				●	●	●					●		●		●	●	●	■
	●	KR**934192**	②				●	●	●					●		●		●	●	●	■
prologe 80 twin in-cana mid	○	KR**934561**	③	●	●	●	●	●	●	●	●	●	●		●		●	●	●	●	■
	●	KR**934562**	③	●	●	●	●	●	●	●	●	●	●		●		●	●	●	●	■
prologe 80 HE twin in-cana mid High efficiency	○	KR**934591**	④				●	●	●					●		●		●	●	●	■
	●	KR**934592**	④				●	●	●					●		●		●	●	●	■
prologe 80 twin in-cana end	○	KR**934661**	③	●	●	●	●	●	●	●	●	●	●		●		●	●	●	●	■
	●	KR**934662**	③	●	●	●	●	●	●	●	●	●	●		●		●	●	●	●	■
prologe 80 HE twin in-cana end High efficiency	○	KR**934691**	④				●	●	●					●		●		●	●	●	■
	●	KR**934692**	④				●	●	●					●		●		●	●	●	■
ligna 80 in-cana High output **L=** n x 70mm x 95mm		KR**934910**	③				●	●	●									●	●	●	

■ **Optional accessories**

Lenses ❷ (for twin, order twice)	KR**704100**	Sculpture lens ❸
	KR**704200**	Diffusing lens
	KR**704800**	Softening lens
	KR**772342**	Anti-glare louvre ❸

	CRI	CCT	Voltage	Wattage	Fixture lumen
① LED	CRI83/90	2700K/3000K/4000K	230V	10,9W	572lm
	CRI98	2700K/3000K/4000K	230V	10,9W	420lm
② LED (SP)	CRI90	2700K/3000K/4000K	230V	9,9W	736lm
(FL)	CRI90	2700K/3000K/4000K	230V	12W	1000lm
③ LED	CRI83/90	2700K/3000K/4000K	230V	2 x 10,9W	1144lm
	CRI98	2700K/3000K/4000K	230V	2 x 10,6W	840lm
④ LED (SP)	CRI90	2700K/3000K/4000K	230V	2 x 9,9W	1472lm
(FL)	CRI90	2700K/3000K/4000K	230V	2 x 12W	2000lm

REMARKS

❶ The coverplates on the inside of the profile are always black.
❷ Only one optional lens or louvre possible. Cannot be used in combination with HE modules.
❸ Use only in combination with spot optic.

Combinations can be specified on order form - Consult your kreon sales representative or one of our offices
IP40

kreon cana 80

pendant modules

holon 80 pendant module in-cana, mid/end

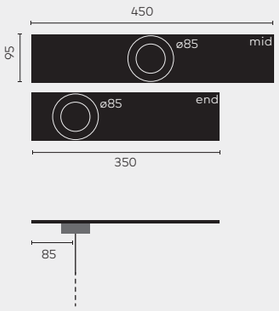

prologe 80 pendant module in-cana, mid/end

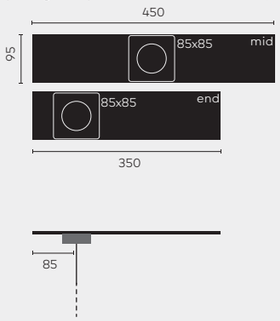

		Colour ❶	KR-code	SW Switchable ON/OFF	VD 1-10V dimming	DD DALI dimming	Required accessories
	holon 80 pendant module in-cana mid	○	KR**934531**	●	●	●	■
		●	KR**934532**	●	●	●	■
	holon 80 pendant module in-cana end	○	KR**934631**	●	●	●	■
		●	KR**934632**	●	●	●	■
	prologe 80 pendant module in-cana mid	○	KR**934541**	●	●	●	■
		●	KR**934542**	●	●	●	■
	prologe 80 pendant module in-cana end	○	KR**934641**	●	●	●	■
		●	KR**934642**	●	●	●	■

■ **Required accessories**

Pendants	See page 88-93

REMARKS
❶ The coverplates on the inside of the profile are always black.

The pendant modules are supplied pre-assembled in the profile. Combinations can be specified on order form. Consult your kreon sales representative or one of the kreon offices.
IP40

cana 120 profile - recessed mounted

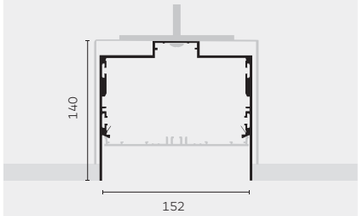

cana 120 profile - corner cut

	Colour	KR-code	Required accessories	Optional accessories
cana 120 profile **Input voltage**: 230V, **nr. of circuits**: 3	○	KR**795201**	■	■
	●	KR**795202**	■	■

■ Required accessories

Plasterkit ❷	KR**705020**	Trimless plasterkit profile ◔ **LxW** Lx180 **H** 190

■ Optional accessories

Corner cut ❸	KR**705521**	cana 120 corner cut 90°, white
	KR**705522**	cana 120 corner cut 90°, black
	KR**705620**	Trimless plasterkit corner cut 90°

REMARKS
❶ Maximum length of a single run profile: 5900mm. Shipping length depends on transport possibilities.
❷ Profile should be finished with polyester gypsum. Max. thickness boardmaterial: 26mm.
❸ No luminaire can be placed in the corner cut.

The profile is supplied pre-assembled. The coverplates on the inside of the profile are always black.
IP40

cana 120

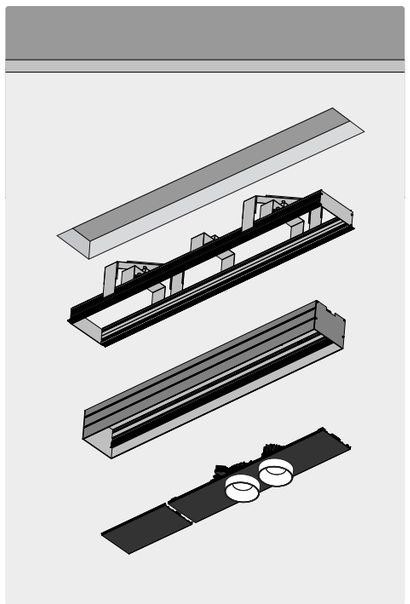

kreon cana 120

holon

holon 120 single in-cana mid

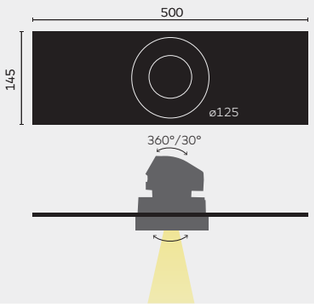

holon 120 single in-cana end

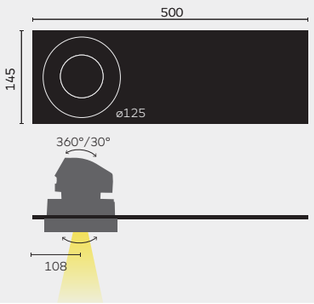

holon 120 twin in-cana mid

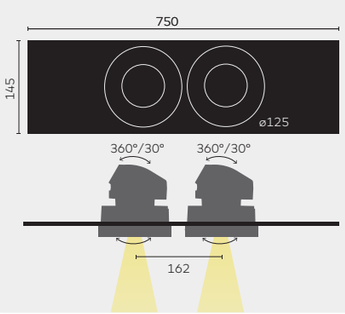

holon 120 twin in-cana end

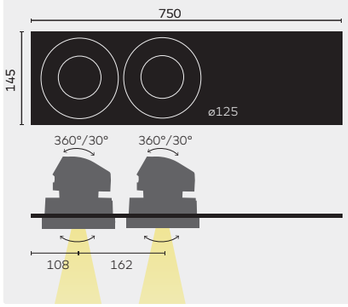

		Colour ❶	KR-code	Light sources	**8327** 2700K, CRI83	**8330** 3000K, CRI83	**8340** 4000K, CRI83	**9027** 2700K, CRI90+	**9030** 3000K, CRI90+	**9040** 4000K, CRI90+	**9827** 2700K, CRI98	**9830** 3000K, CRI98	**9840** 4000K, CRI98	**SP** Spot (12°)	**FL** Flood (24°)	**WFL** Wide flood (38°)	**SW** Switchable ON/OFF	**VD** 1-10V dimming	**DD** DALI dimming	Optional accessories
	holon 120 single in-cana mid	○	KR**934021**	①	●	●	●	●	●	●	●	●	●	●	●	●	●	●	●	■
		●	KR**934022**	①	●	●	●	●	●	●	●	●	●	●	●	●	●	●	●	■
	holon 120 single in-cana end	○	KR**934121**	①	●	●	●	●	●	●	●	●	●	●	●	●	●	●	●	■
		●	KR**934122**	①	●	●	●	●	●	●	●	●	●	●	●	●	●	●	●	■
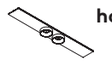	**holon 120 twin in-cana mid**	○	KR**934521**	②	●	●	●	●	●	●	●	●	●	●	●	●	●	●	●	■
		●	KR**934522**	②	●	●	●	●	●	●	●	●	●	●	●	●	●	●	●	■
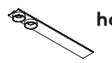	**holon 120 twin in-cana end**	○	KR**934621**	②	●	●	●	●	●	●	●	●	●	●	●	●	●	●	●	■
		●	KR**934622**	②	●	●	●	●	●	●	●	●	●	●	●	●	●	●	●	■

■ **Optional accessories**

Lenses (for twin, order twice)	KR**750100**	Sculpture lens ❷
	KR**750200**	Diffusing lens
	KR**750800**	Softening lens

		CRI	CCT	Voltage	Wattage	Fixture lumen
① LED	**SP**	CRI83	2700K/3000K/4000K	230V	15,6W	915lm
		CRI90	2700K/3000K/4000K	230V	15,6W	915lm
		CRI98	2700K/3000K/4000K	230V	15,6W	654lm
	FL & WFL	CRI83	2700K/3000K/4000K	230V	15,2W	1021lm
		CRI90	2700K/3000K/4000K	230V	17,1W	1021lm
		CRI98	2700K/3000K/4000K	230V	12,9W	715lm
② LED	**SP**	CRI83	2700K/3000K/4000K	230V	2 x 15,6W	1830lm
		CRI90	2700K/3000K/4000K	230V	2 x 15,6W	1830lm
		CRI98	2700K/3000K/4000K	230V	2 x 15,6W	1308lm
	FL & WFL	CRI83	2700K/3000K/4000K	230V	2 x 15,2W	2042lm
		CRI90	2700K/3000K/4000K	230V	2 x 17,1W	2042lm
		CRI98	2700K/3000K/4000K	230V	2 x 12,9W	1430lm

REMARKS
❶ The coverplates on the inside of the profile are always black.
❷ Use only in combination with spot optic.

Combinations can be specified on order form Consult your kreon sales representative or one of the kreon offices.
IP40

kreon cana 120

prologe

prologe 120 single in-cana mid

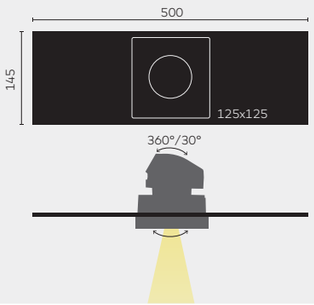

prologe 120 single in-cana end

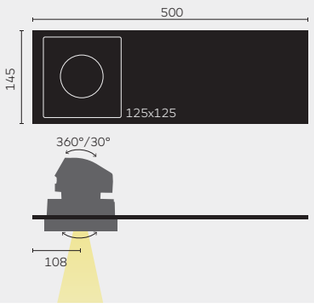

prologe 120 twin in-cana mid

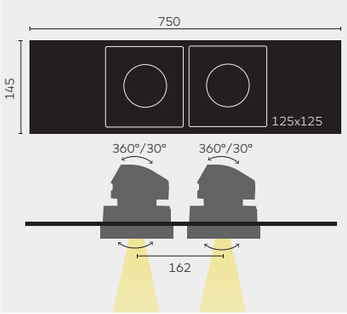

prologe 120 twin in-cana end

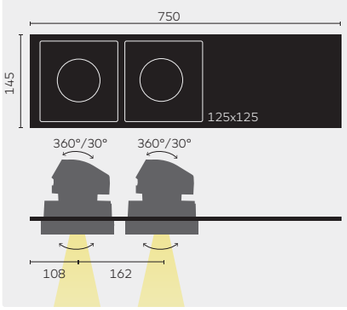

	Colour ❶	KR-code	Light sources	**8327** 2700K, CRI83	**8330** 3000K, CRI83	**8340** 4000K, CRI83	**9027** 2700K, CRI90+	**9030** 3000K, CRI90+	**9040** 4000K, CRI90+	**9827** 2700K, CRI98	**9830** 3000K, CRI98	**9840** 4000K, CRI98	**SP** Spot (12°)	**FL** Flood (24°)	**WFL** Wide flood (38°)	**SW** Switchable ON/OFF	**VD** 1-10V dimming	**DD** DALI dimming	Optional accessories
prologe 120 single in-cana mid	○	KR**934071**	①	●	●	●	●	●	●	●	●	●	●	●	●	●	●	●	■
	●	KR**934072**	①	●	●	●	●	●	●	●	●	●	●	●	●	●	●	●	■
prologe 120 single in-cana end	○	KR**934171**	①	●	●	●	●	●	●	●	●	●	●	●	●	●	●	●	■
	●	KR**934172**	①	●	●	●	●	●	●	●	●	●	●	●	●	●	●	●	■
prologe 120 twin in-cana mid	○	KR**934571**	②	●	●	●	●	●	●	●	●	●	●	●	●	●	●	●	■
	●	KR**934572**	②	●	●	●	●	●	●	●	●	●	●	●	●	●	●	●	■
prologe 120 twin in-cana end	○	KR**934671**	②	●	●	●	●	●	●	●	●	●	●	●	●	●	●	●	■
	●	KR**934672**	②	●	●	●	●	●	●	●	●	●	●	●	●	●	●	●	■

■ Optional accessories

Lenses (for twin, order twice)	KR**750100**	Sculpture lens ❷
	KR**750200**	Diffusing lens
	KR**750800**	Softening lens

		CRI	CCT	Voltage	Wattage	Fixture lumen
① LED	**SP**	CRI83	2700K/3000K/4000K	230V	15,6W	915lm
		CRI90	2700K/3000K/4000K	230V	15,6W	915lm
		CRI98	2700K/3000K/4000K	230V	15,6W	654lm
	FL & WFL	CRI83	2700K/3000K/4000K	230V	15,2W	1021lm
		CRI90	2700K/3000K/4000K	230V	17,1W	1021lm
		CRI98	2700K/3000K/4000K	230V	12,9W	715lm
② LED	**SP**	CRI83	2700K/3000K/4000K	230V	2 x 15,6W	1830lm
		CRI90	2700K/3000K/4000K	230V	2 x 15,6W	1830lm
		CRI98	2700K/3000K/4000K	230V	2 x 15,6W	1308lm
	FL & WFL	CRI83	2700K/3000K/4000K	230V	2 x 15,2W	2042lm
		CRI90	2700K/3000K/4000K	230V	2 x 17,1W	2042lm
		CRI98	2700K/3000K/4000K	230V	2 x 12,9W	1430lm

REMARKS
❶ The coverplates on the inside of the profile are always black.
❷ Use only in combination with spot optic.

Combinations can be specified on order form Consult your kreon sales representative or one of the kreon offices.
IP40